Installation Instruction
Switch Model 6403TUE*

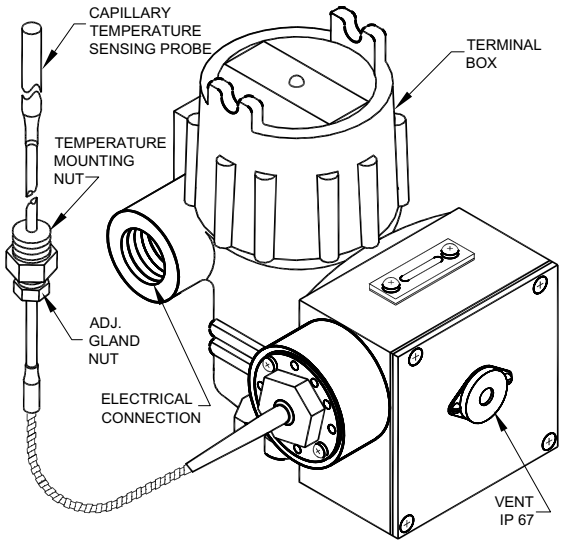

WIRING DIAGRAM

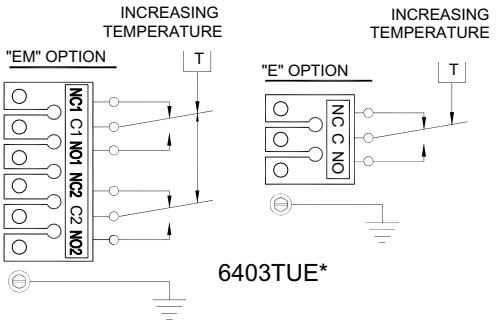

CCS switches are designed to provide long life and maintain excellent set-point accuracy under adverse environmental conditions.

Check Nameplate on the switch for maximum external probe proof and system (overpressure), as shown.

GENERAL:

a. Observe all Warnings and Cautions contained on the attached Warning Sticker, the Warning Declaration and the CCS Catalog.

b. Follow all applicable Governmental or other Codes or Regulations.

FOR ORDERING INFORMATION

Consult factory or authorized factory representative. Specify full catalog part number (with optional modification) and factory set-point.

Custom Control Sensors, Inc
21111 Plummer Street
Chatsworth, CA 91311
Tel: (818) 341-4610 • Fax: (818) 709-0426
http://www.ccsdualsnap.com

CCS International
Unit 13, Shrivenham Hundred Business Park
Watchfield, Nr. Swindon, United Kindom SN6 8TZ
Tel: (+441 793) 783-545 • Fax: (+441 793) 783-532
http://www.ccsdualsnap.co.uk

MOUNTING:

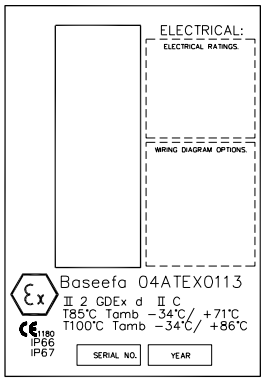

a. Units may be mounted in any position on a flat surface using two M10 mounting screws at least 25 mm. long with two M10 flat washer and two lock washers.

Warning: Cool all sensing areas to a safe temperature prior to installation or removal of this device. Do not exceed nameplate listed proof temperatures and pressures.

b) Units are supplied with male NPT temperature ports as standard suitable for connection to NPT Thermowells or NPT taper threaded pipe. Capillary models are provided with an adjustable gland nut for positioning of the temperature sensing probe;

c) If a Thermowell is used pipe sealing compounds are usually not required. Pipe joint sealing compound is preferred over Teflon tape. However, either method of sealing is acceptable with proper care to avoid introducing sealing material into plumbing.

ELECTRICAL CONNECTIONS:

WARNING: DO NOT MAKE ELECTRICAL CONNECTIONS WHILE ELECTRICAL POWER IS ON. THIS PRODUCT MUST BE INSTALLED BY A QUALIFIED ELECTRICIAN TO AVOID RISK OF ELECTROCUTION.

a. Two M20 x 1.5-6h or optional 3/4-14 NPT female conduit threads are provided.

b. Before making wire connections disconnect electrical power, loosen M5 locking cap screw and then unscrew the Terminal Box Cover. Check for multiple circuits.

c. Make electrical connections per appropriate wiring diagram in accordance to the Electrical codes and regulations. Keep as much as possible hook-up wires to maintain the service loop inside of the Terminal Box to facilitate service.

d. Proper grounding must be accomplished by use both of the earthing terminal and the external M5 ground screw.
Note: It is the responsibility of the user to ensure proper earthing of the external earth facility provided as the means for effective earth fault protection and equi-potential bonding functions or some other equally effective method.

e. Install Terminal Box Cover and re-tighten the locking cap screw.

ADJUSTMENT:

Temperature settings are externally adjustable according to supplied switch model temperature range. (Not applicable if units are factory set)

a. If the electrical circuit cannot be used for testing, disconnect electrical power and use a suitable circuit tester or light box.

b) Immerse **only** the temperature sensing probe of the switch in a suitably agitated fluid. In an approved temperature calibration bath. Consult the manufacturer of the bath for a suitable fluid for the temperatures to be encountered. Stabilize the bath at the desired set point temperature and adjust the adjustment wheel so that unit just actuates. Verify the set point by decreasing the temperature below the reset point and slowly increasing the temperature through the set point.

b. Loosen access cover screw (not shown) and turn the adjustment screw using screwdriver slot; turn clockwise to increase settings and/or turn counterclockwise to decrease setting.

c. Re- tighten access cover.

d. Reconnect electrical circuit and return power to unit.

WARNING DECLARATION

If this switch is used to protect equipment or personnel from unsafe pressure or to guard against the hazardous release of contained substances it must be installed and operated in accordance with applicable codes, regulations and standards. This switch must be used in conjunction with system design(s) or procedure(s) necessary to mitigate any hazard resulting from its failure. Conform to installation instructions accompanying this switch. Individuals who ignore this warning may suffer serious or fatal injury and do so at their own risk. Custom Control Sensors is not liable for any misuse, abuse, suitability or adequacy of user's application of the switch. Service by qualified personnel only.

P/N 10-1159, REV. N/C