CUSTOM CONTROL SENSORS, INC.

690DT & 690DTU INSTALLATION INSTRUCTION

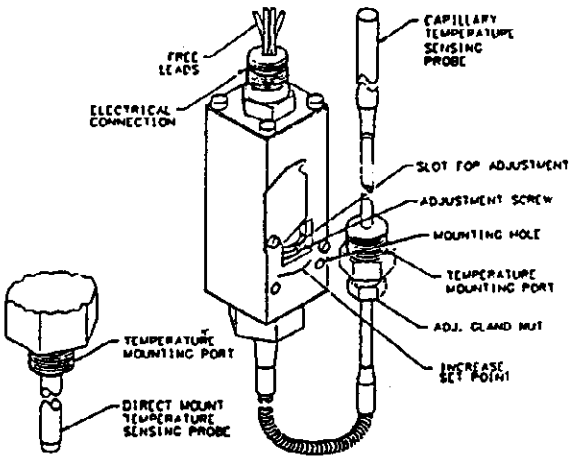

SPECIAL CONDITIONS FOR SAFE USE:

THE INTEGRAL CABLE SHALL BE SUITABLY MECHANICALLY PROTECTED AND TERMINATED IN A SUITABLE JUNCTION OR TERMINAL FACILITY

GENERAL:

a. Observe all Warnings and Cautions contained on the attached Warning Sticker, the Warning Declaration and the CCS Catalog.

b. Follow all applicable federal, state government or industry codes and regulations, pertaining to the use of this device.

MOUNTING:

a. Units may be directly mounted in any position. On a flat surface using (2) mounting holes provided at the source of the variable pressure sensed.

WARNING:

COOL ALL SENSING AREAS TO A SAFE TEMPERATURE PRIOR TO INSTALLATION OR REMOVAL OF THIS DEVICE. INSURE THAT BOTH TEMPERATURE AND ELECTRICAL CONNECTIONS ARE DEACTIVATED AND LOCKED OFF IN THE UNPRESSURIZED AND OPEN CIRCUIT CONDITION ON ALL ATTACHED CIRCUITS. DO NOT EXCEED NAMEPLATE PRESSURE OR ELECTRICAL RATINGS.

b. Units are supplied with male NPT temperature ports suitable for connection to NPT Thermowells or NPT taper threaded pipe. Capillary models are provided with an adjustable gland nut for positioning of the temperature sensing probe.

c. If a Thermowell is used pipe sealing compounds are usually not required. Pipe joint sealing compound is preferred over Teflon tape. However, either method of sealing is acceptable with proper care to avoid introducing sealing material into plumbing

ELECTRICAL CONNECTIONS:

a. Electrical conductors are provided within a male conduit connection. Flexible conduit is recommended.

WIRING DIAGRAMS

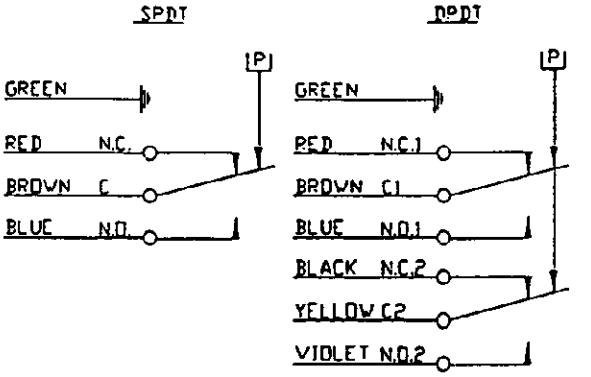

b. When making wire connections disconnect electrical power. Check for multiple circuits.

c. Make electrical connections in accordance with the NEC and all other appropriate codes and regulations. Conduit enclosure shall be wrenchtight or 12 ft. lb. max. torque applied. Keep as much wire as possible for a service loop to facilitate service, see wiring diagrams.

d. Proper grounding must be accomplished by connecting to the green wire provided.

ADJUSTMENT: (Not applicable if units are factory set) Pressure settings are externally adjustable from the pressure port side.

a. If the electrical circuit cannot be used for testing disconnect electrical power and use a suitable circuit tester or light box.

b. Loosen access cover. Adjust adjustment screw using screwdriver slot as illustrated, then attach to a variable pressure source with a suitable gage and check that the circuit continuity operates at the pressures desired.

- Clockwise to increase settings.
- Counterclockwise to decrease setting.

c. Immerse only the temperature sensing probe of the switch in a suitably agitated fluid, in an approved temperature calibration bath. Consult the manufacturer of the bath for a suitable fluid for the temperatures to be encountered. Stabilize the bath at the desired set point temperature and adjust the adjustment wheel so that unit just actuates. Verify the set point by decreasing the temperature below the reset point and slowly increasing the temperature through the set point.

d. Re-tighten access cover.

e. Reconnect electrical circuit 12 ft. lb. max

f. Return power to unit.

WARNING DECLARATION

If this switch is used to protect equipment or personnel from unsafe pressure or to guard against the hazardous release of contained substances it must be installed and operated in accordance with applicable codes, regulations and standards. This switch must be used in conjunction with system design(s) or procedure(s) necessary to mitigate any hazard resulting from its failure. Conform to installation instructions accompanying this switch. Individuals who ignore this warning may suffer serious or fatal injury and do so at their own risk. Custom Control Sensors is not liable for any misuse, abuse, suitability or adequacy of user's application of the switch. Service by qualified personnel only.