CUSTOM CONTROL SENSORS, INC.

646 INSTALLATION INSTRUCTION

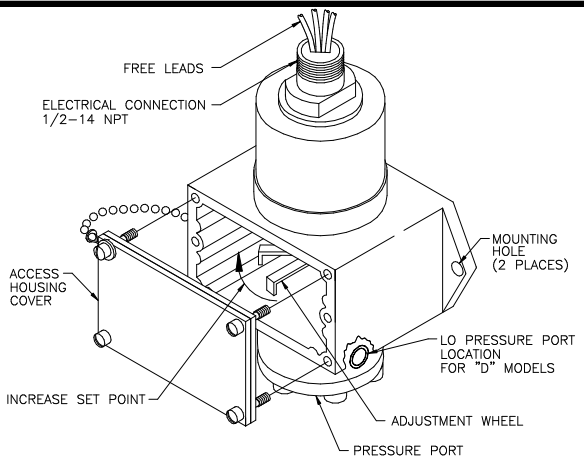

General:

a. Observe all Warnings and Cautions contained on the attached Warning Sticker, the Warning Declaration and the CCS Catalog.

b. Follow all applicable Governmental or other Codes or Regulations such as, but not restricted to NEC, ASME, CSA and OSHA.

Mounting:

a. Units may be mounted in any position. On a flat surface using (2) mounting holes provided and 1/4" screws at least 3/4" long.

Warning: Release all pressure prior to installation or removal of this device. Do not exceed nameplate listed proof pressures.

a. Units are supplied with female NPT ports suitable for connection to NPT pipe nipples or NPT taper threaded pipe. CCS recommends use of either a union or bendable tubing. This will eliminate excessive strain on the housing.

b. Pipe joint sealing compound is preferred over Teflon tape. However, either method of sealing is acceptable with proper care to avoid introducing sealing material into pressure switch or plumbing.

Electrical Connections:

WARNING: Do not make electrical connections while electrical power is ON.

a. Electrical conductors are provided within a 1/2" NPT male conduit connection. Flexible conduit is recommended.

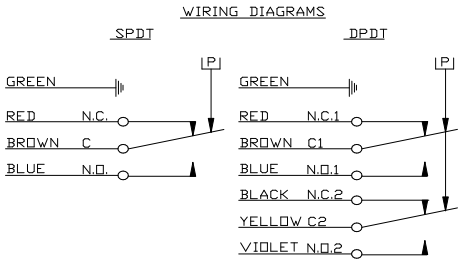

b. When making wire connections disconnect electrical power. Check for multiple circuits.

c. Make electrical connections in accordance with the NEC and all other appropriate codes and regulations. Keep as much wire as possible for a service loop to facilitate service, see wiring diagrams.

Note: Circuitry coding is provided on wires for proper electrical connection - see wiring diagrams.

d. Grounding: Proper grounding must be accomplished by use of green ground wire provided.

Adjustment: (Not applicable if units are factory set) Pressure settings are externally adjustable.

a. If the electrical circuit cannot be used for testing disconnect electrical power and use a suitable circuit tester or light box.

b. Remove access cover. Adjust wheel as illustrated.

- Clockwise to increase settings.
- Counterclockwise to decrease settings.

c. Re-install access cover.

d. Reconnect electrical circuit.

e. Return power to unit.

WARNING DECLARATION

If this switch is used to protect equipment or personnel from unsafe pressure or to guard against the hazardous release of contained substances it must be installed and operated in accordance with applicable codes, regulations and standards. This switch must be used in conjunction with system design(s) or procedure(s) necessary to mitigate any hazard resulting from its failure. Conform to installation instructions accompanying this switch. Individuals who ignore this warning may suffer serious or fatal injury and do so at their own risk. Custom Control Sensors is not liable for any misuse, abuse, suitability or adequacy of user's application of the switch. Service by qualified personnel only.