Installation Instruction
Switch Model 6403G* & 6403D*

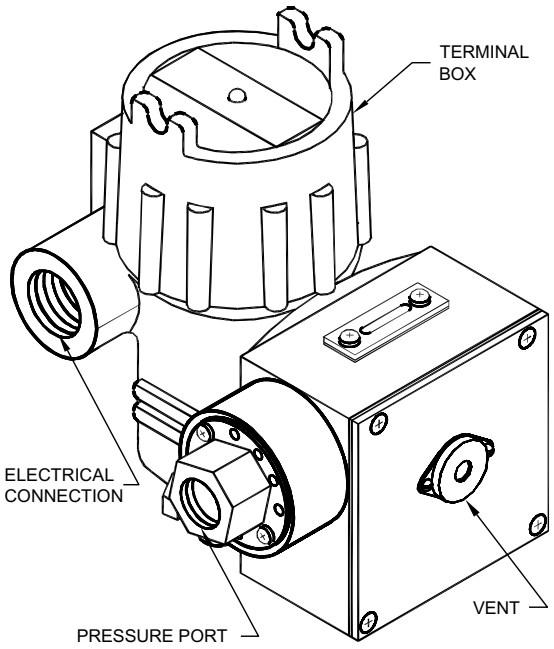

WIRING DIAGRAMS

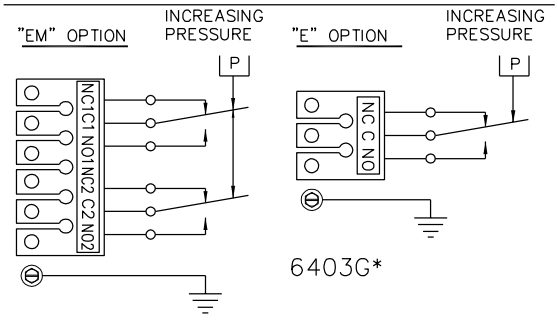

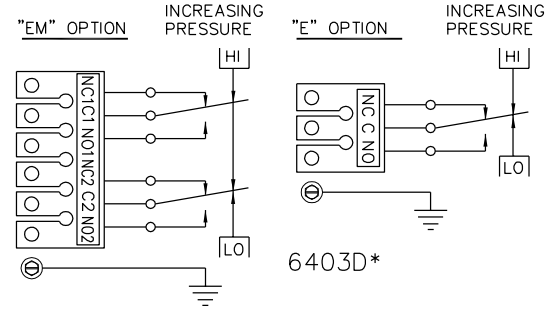

FOR ORDERING INFORMATION

Consult factory or authorized factory representative. Specify full catalog part number (with optional modification) and factory set-point.

Custom Control Sensors, Inc
21111 Plummer Street
Chatsworth, CA 91311
Tel: (818) 341-4610 • Fax: (818) 709-0426
http://www.ccsdualsnap.com

CCS International
Unit 13, Shrivenham Hundred Business Park
Watchfield, Nr. Swindon, United Kindom SN6 8TZ
Tel: (+441 793) 783-545 • Fax: (+441 793) 783-532
http://www.ccsdualsnap.co.uk

CCS switches are designed to provide long life and maintain excellent set-point accuracy under adverse environmental conditions.

Check Nameplate on the switch for maximum proof (overpressure), as shown.

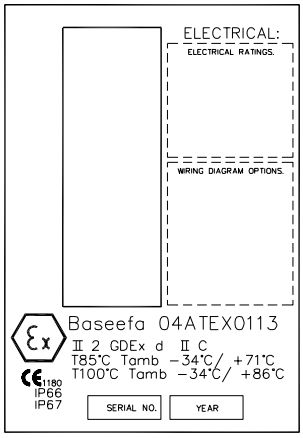

GENERAL:

a. Observe all Warnings and Cautions contained on the attached Warning Sticker, the Warning Declaration and the CCS Catalog.
b. Follow all applicable Governmental or other Codes or Regulations.

MOUNTING:

a. Units may be mounted in any position on a flat surface using two M10 mounting screws at least 25 mm. long with two M10 flat washer and two lock washers.

WARNING: RELEASE ALL PRESSURE PRIOR TO INSTALLATION OR REMOVAL OF THIS DEVICE. DO NOT EXCEED NAMEPLATE LISTED PROOF PRESSURES.

a. Units are supplied with female Pressure Port suitable for connection to NPT pipe thread. CCS recommends use of either pipe union or bendable tubing. This will eliminate excessive strain on the housing.
b. Pipe joint sealing compound is preferred over Teflon tape. However, either method of sealing is acceptable with proper care to avoid introducing sealing material into pressure switch or plumbing.

ELECTRICAL CONNECTIONS:

WARNING: DO NOT MAKE ELECTRICAL CONNECTIONS WHILE ELECTRICAL POWER IS ON. THIS PRODUCT MUST BE INSTALLED BY A QUALIFIED ELECTRICIAN TO AVOID RISK OF ELECTROCUTION.

a. Two M20 x 1.5-6h or optional 3/4-14 NPT female conduit threads are provided.
b. Before making wire connections disconnect electrical power, loosen M5 locking cap screw and then unscrew the Terminal Box Cover. Check for multiple circuits.
c. Make electrical connections per appropriate wiring diagram in accordance to the Electrical codes and regulations. Keep as much as possible hook-up wires to maintain the service loop inside of the Terminal Box to facilitate service.
d. Proper grounding must be accomplished by use both of the earthing terminal and the external M5 ground screw.

Note: It is the responsibility of the user to ensure proper earthing of the external earth facility provided as the means for effective earth fault protection and equipotential bonding functions or some other equally effective method.

e. Install Terminal Box Cover and re-tighten the locking cap screw.

ADJUSTMENT:

Note: Pressure settings are externally adjustable according to supplied switch model pressure range. Use calibrated pressure gauges only.
(Not applicable if units are factory set)

a. If the electrical circuit cannot be used for testing, disconnect electrical power and use a suitable circuit tester or light box.
b. Loosen access cover screw (not shown) and turn the adjustment screw using screwdriver slot; turn clockwise to increase settings and/or turn counterclockwise to decrease setting.
c. Re- tighten access cover.
d. Reconnect electrical circuit and return power to unit.

WARNING DECLARATION

If this switch is used to protect equipment or personnel from unsafe pressure or to guard against the hazardous release of contained substances it must be installed and operated in accordance with applicable codes, regulations and standards. This switch must be used in conjunction with system design(s) or procedure(s) necessary to mitigate any hazard resulting from its failure. Conform to installation instructions accompanying this switch. Individuals who ignore this warning may suffer serious or fatal injury and do so at their own risk. Custom Control Sensors is not liable for any misuse, abuse, suitability or adequacy of user's application of the switch. Service by qualified personnel only.

P/N 10-1155, REV. N/C